NOTES: UNLESS OTHERWISE SPECIFIED

1. NET WEIGHT APPROXIMATELY 0.17 KG [0.38 LBS].

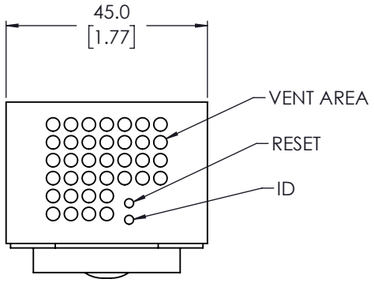


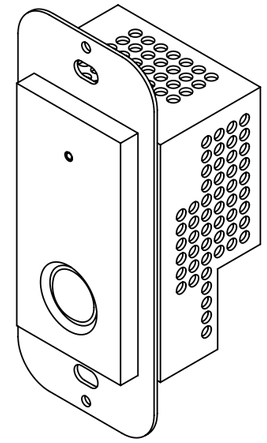

NA
(SHOWN W/O COVER PLATE)

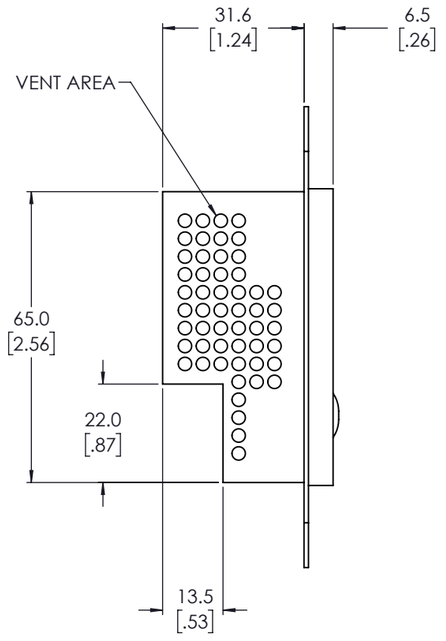


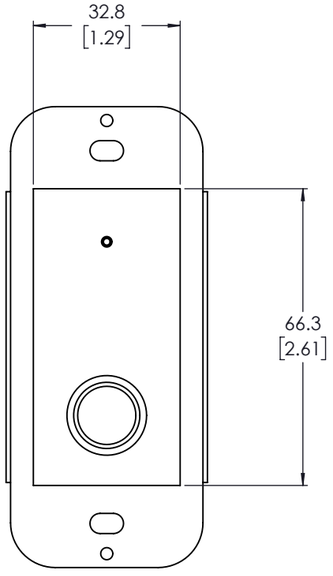


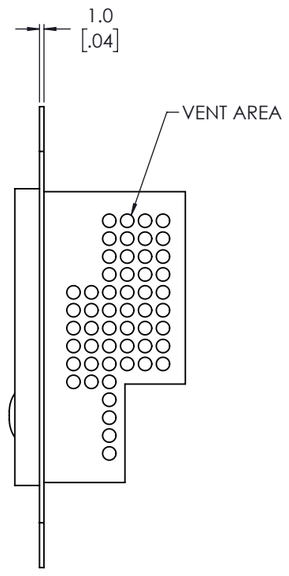


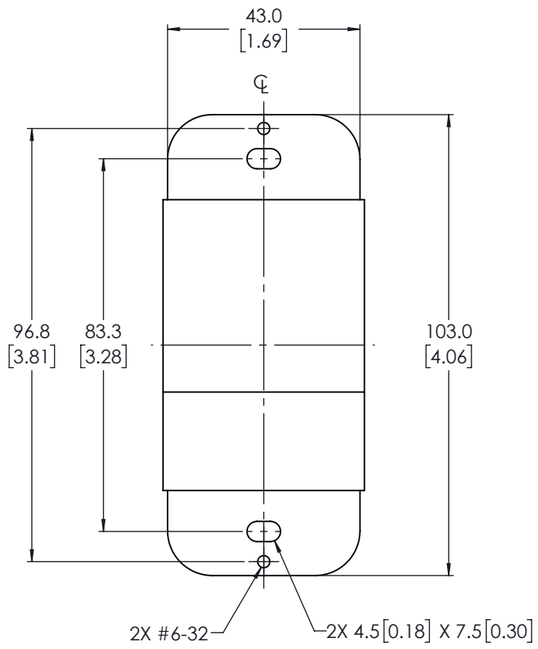


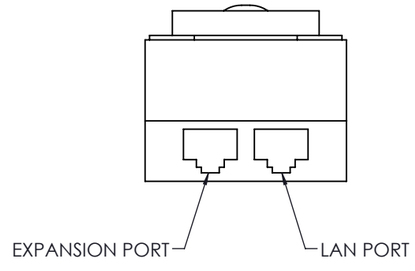





THIS DOCUMENT CONTAINS CONFIDENTIAL OR PROPRIETARY INFORMATION WHICH IS THE PROPERTY OF QSC, LLC THAT MAY NOT BE DISCLOSED, REPRODUCED OR USED WITHOUT EXPRESS WRITTEN CONSENT FROM QSC, LLC. NO PORTION OF THIS DOCUMENT MAY BE REPRODUCED, REDISTRIBUTED, OR OTHERWISE DISCLOSED TO ANY THIRD PARTY WITHOUT QSC'S WRITTEN PERMISSION.

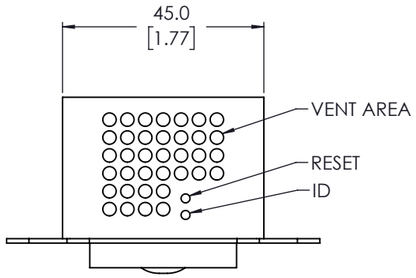


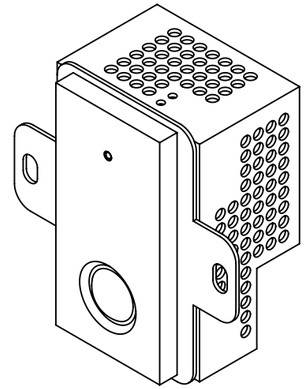

EU
(SHOWN W/O COVER PLATE)

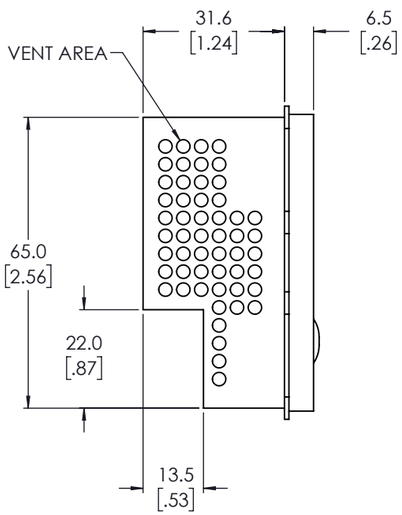


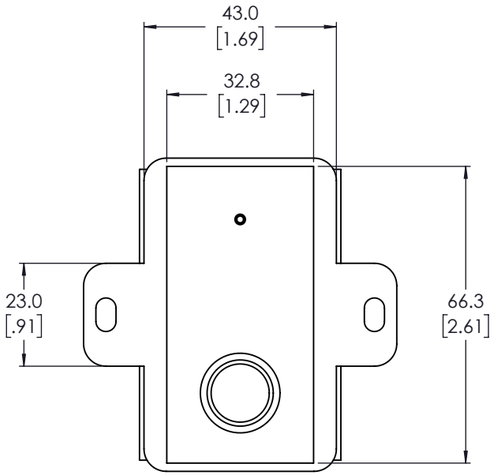


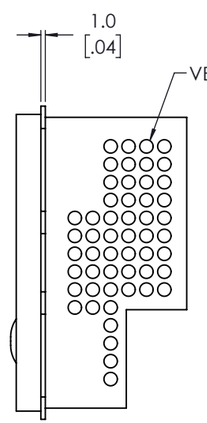


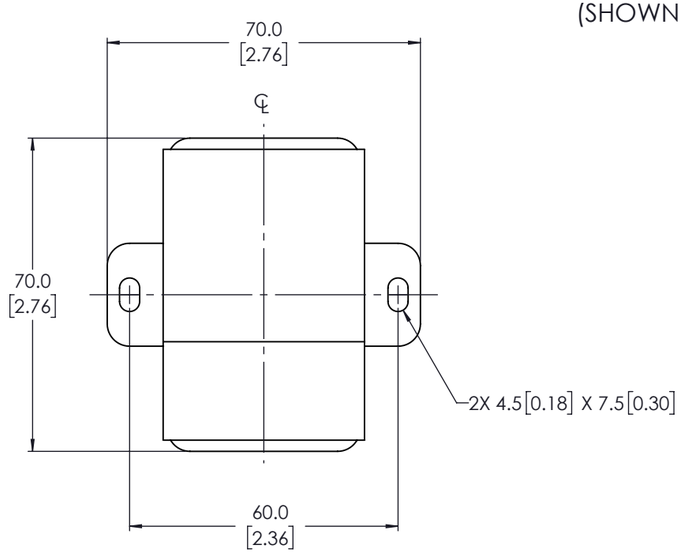


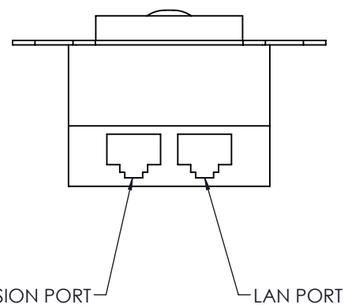





THIS DOCUMENT CONTAINS CONFIDENTIAL OR PROPRIETARY INFORMATION WHICH IS THE PROPERTY OF QSC, LLC THAT MAY NOT BE DISCLOSED, REPRODUCED OR USED WITHOUT EXPRESS WRITTEN CONSENT FROM QSC, LLC. NO PORTION OF THIS DOCUMENT MAY BE REPRODUCED, REDISTRIBUTED, OR OTHERWISE DISCLOSED TO ANY THIRD PARTY WITHOUT QSC'S WRITTEN PERMISSION.

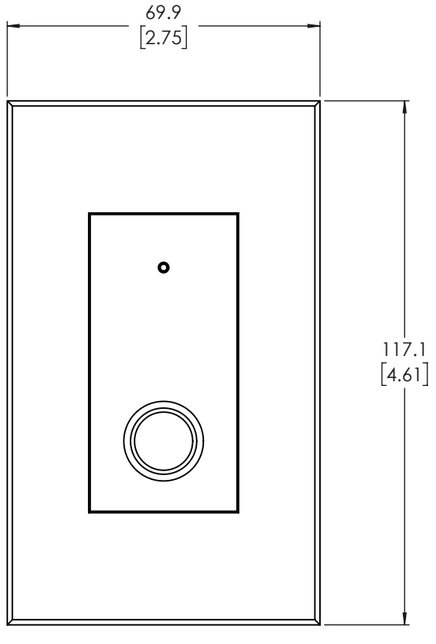


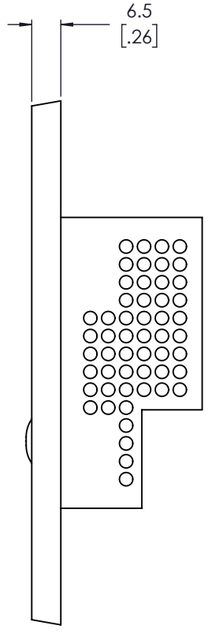


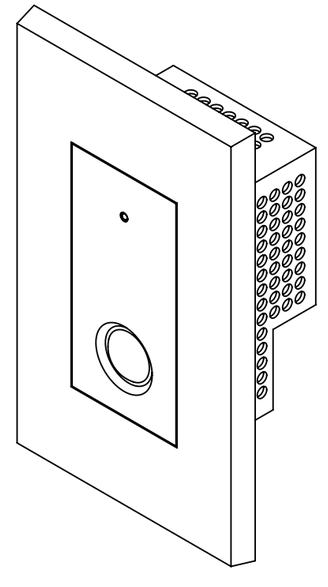

NA W/COVER PLATE

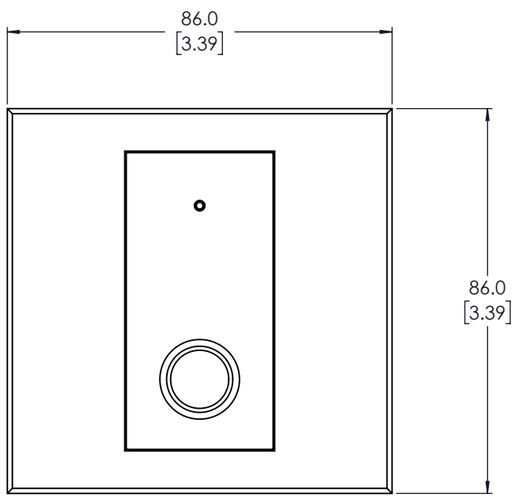


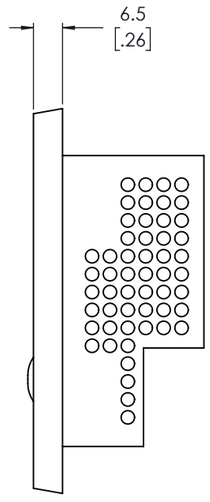


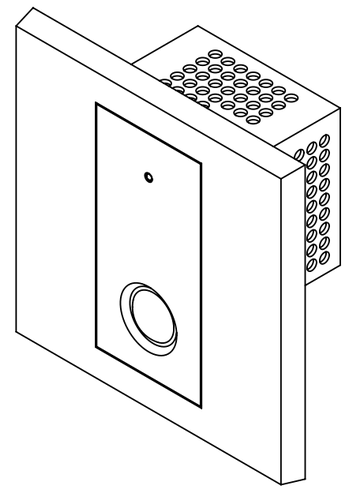

EU W/COVER PLATE

QSC, LLC
1675 MACARTHUR BLVD
COSTA MESA, CA 92626 USA

THIS DOCUMENT CONTAINS CONFIDENTIAL OR PROPRIETARY INFORMATION WHICH IS THE PROPERTY OF QSC, LLC THAT MAY NOT BE DISCLOSED. REPRODUCED OR USED WITHOUT EXPRESS WRITTEN CONSENT FROM QSC, LLC. NO PORTION OF THIS DOCUMENT MAY BE REPRODUCED, REDISTRIBUTED, OR OTHERWISE DISCLOSED TO ANY THIRD PARTY WITHOUT QSC'S WRITTEN PERMISSION.

CAGE CODE 00PW4
FORM QOS40169 C

UNLESS OTHERWISE SPECIFIED DIMENSIONS ARE IN MM [IN]
PROJECTION

TOLERANCES ARE:
DECIMALS ANGLES
.X ± 3 ±1°
.XX ±

DRAWN BY K.CASTRO
MECH ENGINEER D.GREEN
TECH DIRECTOR S.ALI
MFG ENGINEER C.WHITNEY
REV BY KC
REV DATE 16-JUL-2026

# WALL PLATE, AUDIO, QIO-WP-BT, T009

DRAWING NUMBER FG-901754-2D
REV A
SCALE: 3:4