


ENG • ESP

# GA201

## 2x 125W Compact Power Amplifier

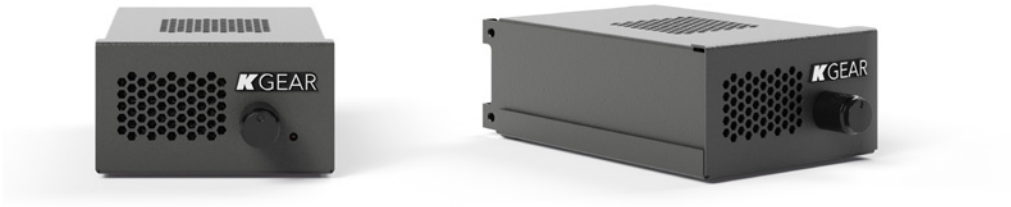




The GA201 is a compact 2-Channel power amplifier. Designed for high performance applications for permanent installations such ad retail shops, restaurants, hotels, pubs, disco bars and residential, the GA201 is the perfect companion for driving the KGEAR GF loudspeakers and GS6 subwoofer.
The compact modular design allows to fit up to 6 GA201 elements (12 channels) into 1 rack unit.

| Frequent Applications | |
|---|---|
| Retail | Cafes, Bistros & Restaurants |
| Hotels & Resorts | Fitness & Wellness |

| General | |
|---|---|
| Type | 2-ch Class D<br>power amplifier |
| Output power | 2x 125 $W_{peak}$ @ 4 Ω |
| Minimum impedance | 4 Ω<br>(2 Ω for background music) |
| Frequency response | 20 Hz - 20 kHz |
| Input connectors | 3,5mm Mini Jack stereo |
| Output connectors | 2x Speaker Output Euroblock (Phoenix MSTB 2,5/ 2-ST-5,08 plug)<br>1x Line Link Output<br>3,5mm Mini Jack stereo |
| Protections | Thermal Protections (Power limiting - Thermal Shutdown), Short-circuit/overload output protections, stationary high frequency protection, peak limiter, RMS limiter, frequency dependent RMS limiter, Clip limiter |
| Operating Voltage | Dedicated AC/DC<br>power adapter:<br>input: 100-240V ~ AC, 50-60 Hz<br>output: 12-24 $V_{DC}$, 4 A |
| Dimensions (WxHxD) | 72 x 43x 134 mm<br>(2.83 x 1.69 x 5.16 in) |
| Weight | 1 kg (2.2 lb) |
| Material | Stainless steel |
| Color | Black |

## GA201 Mechanical View

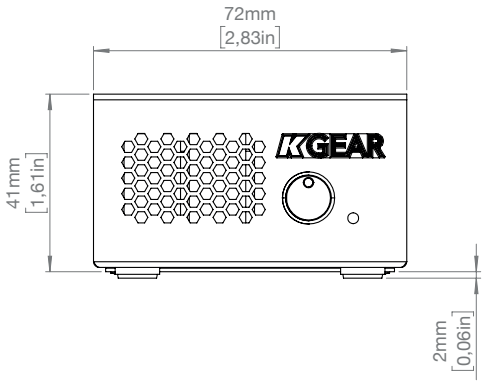


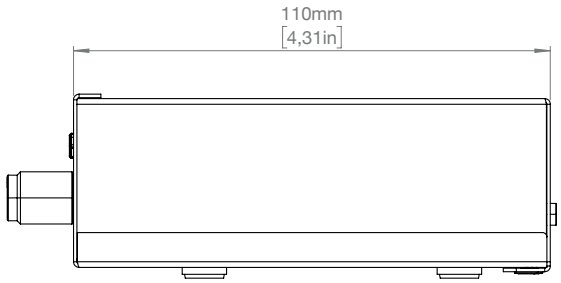


## GA201 Rear Panel

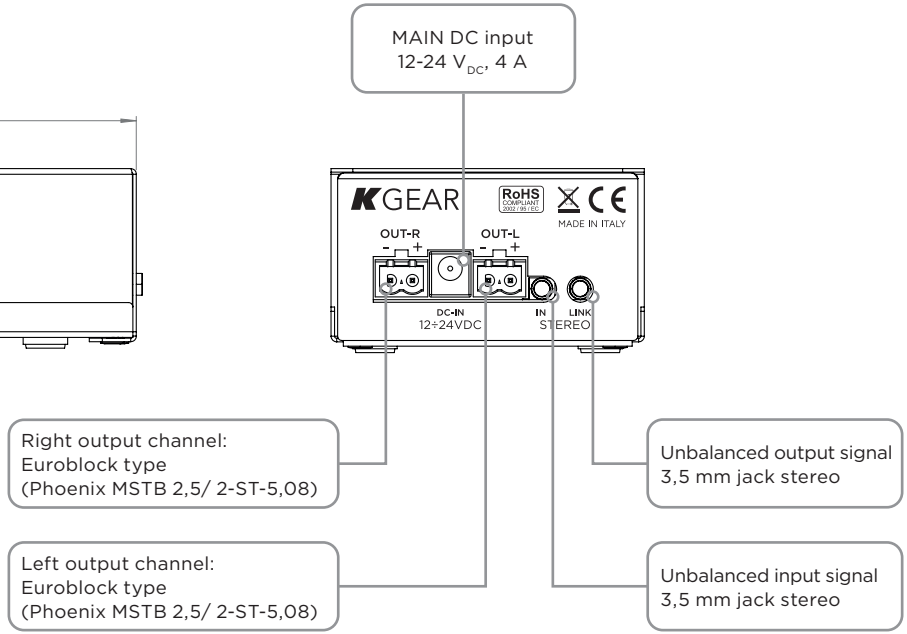


## Rack Mount Assembly

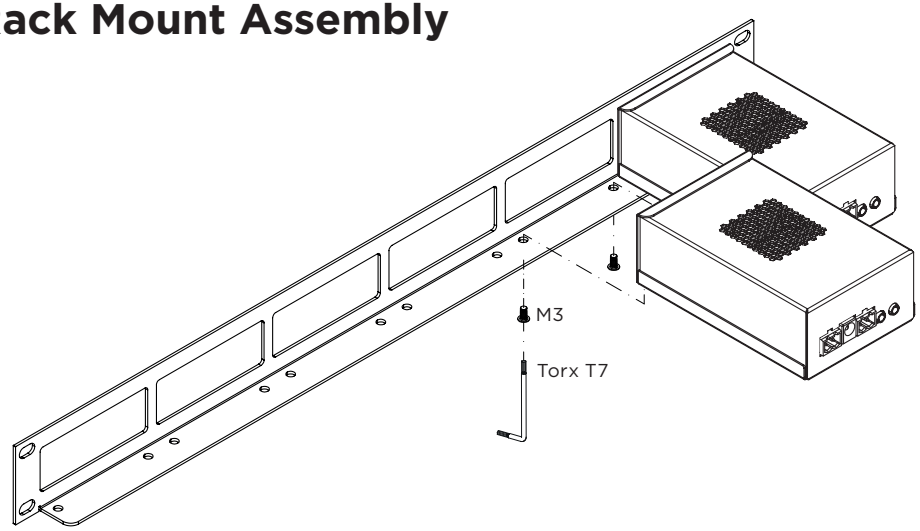


## GA201 Front Panel

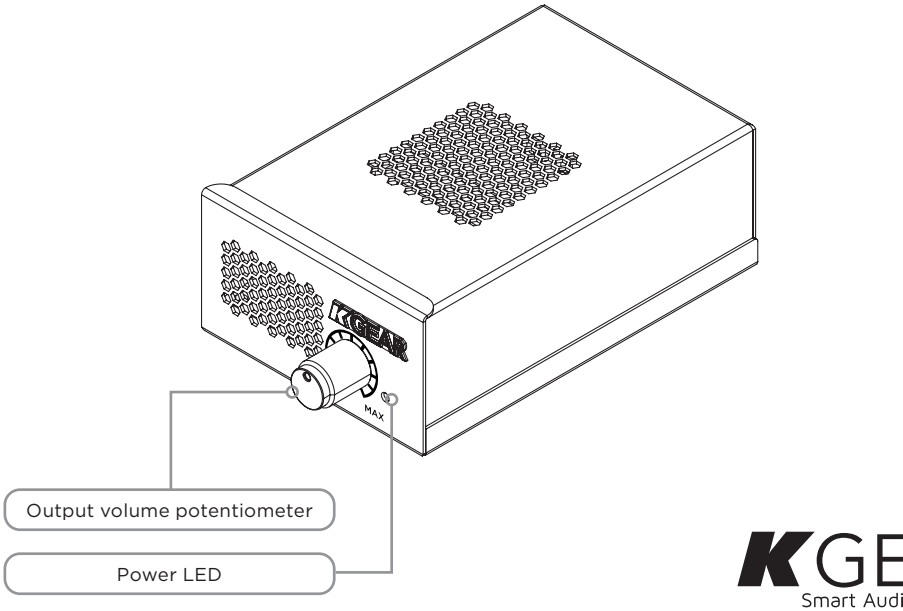


KGEAR
Smart Audio Solutions

KGEAR
Smart Audio Solutions

# GA201

## 2x 125W Amplificador de potencia compacto

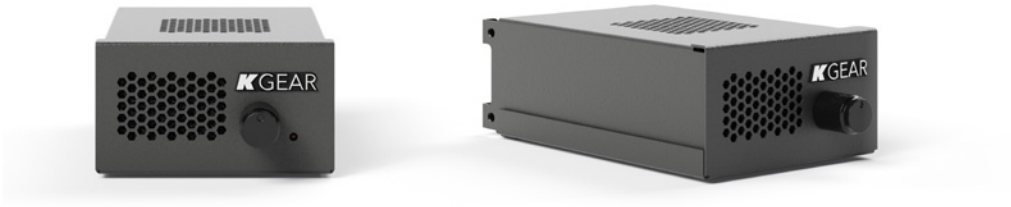




El GA201 es un amplificador de potencia compacto de 2 canales. Diseñado para aplicaciones de alto rendimiento en instalaciones permanentes como tiendas, restaurantes, hoteles, pubs, bares discoteca y residenciales, el GA201 es el compañero perfecto para accionar los altavoces KGEAR GF y el subwoofer GS6.
Su diseño modular compacto permite alojar hasta 6 elementos GA201 (12 canales) en 1 unidad de rack.

| Aplicaciones frecuentes | |
|---|---|
| Retail | Cafes, Bistros & Restaurants |
| Hotels & Resorts | Fitness & Wellness |

| General | |
|---|---|
| Tipo | 2-ch Class D<br>power amplifier |
| Potencia de salida | 2x 125 $W_{peak}$ @ 4 Ω |
| Impedancia mínima | 4 Ω<br>(2 Ω for background music) |
| Respuesta en frecuencia | 20 Hz - 20 kHz |
| Conectores de entrada | 3,5mm Mini Jack stereo |
| Conectores de salida | 2x Speaker Output Euroblock<br>(Phoenix MSTB 2,5/ 2-ST-5,08 plug)<br>1x Line Link Output<br>3,5mm Mini Jack stereo |
| Protecciones | Protecciones térmicas (Limitación de potencia - Apagado térmico), Protecciones de salida contra cortocircuitos/sobrecargas, Protección estacionaria de alta frecuencia, Limitador de picos, Limitador RMS, Limitador RMS dependiente de la frecuencia, Limitador Clip |
| Tensión de funcionamiento | Dedicated AC/DC<br>power adapter:<br>input: 100-240V ~ AC, 50-60 Hz<br>output: 12-24 $V_{DC}$, 4 A |
| Dimensiones (WxHxD) | 72 x 43x 134 mm<br>(2.83 x 1.69 x 5.16 in) |
| Peso | 1 kg (2.2 lb) |
| Material | Stainless steel |
| Color | Black |

## GA201 Mechanical View

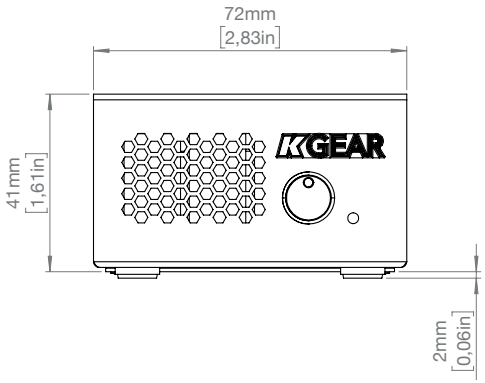


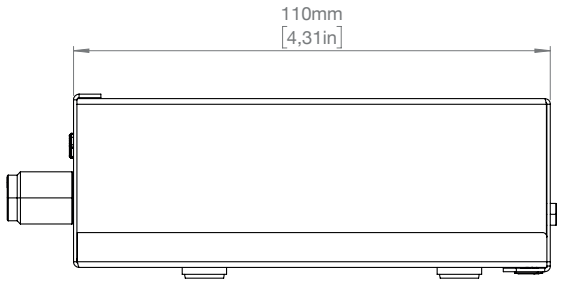


## GA201 Panel trasero

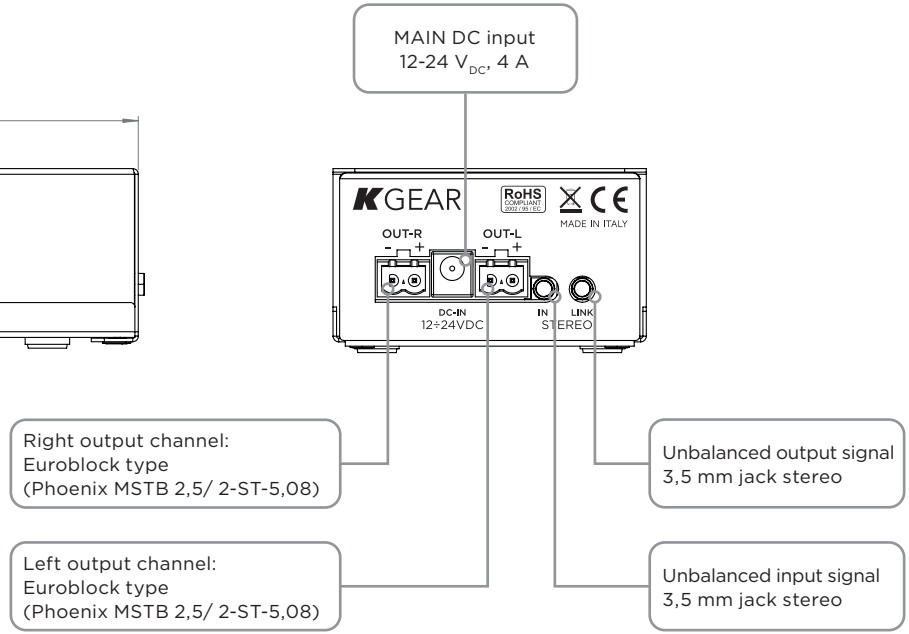


## Rack Montaje

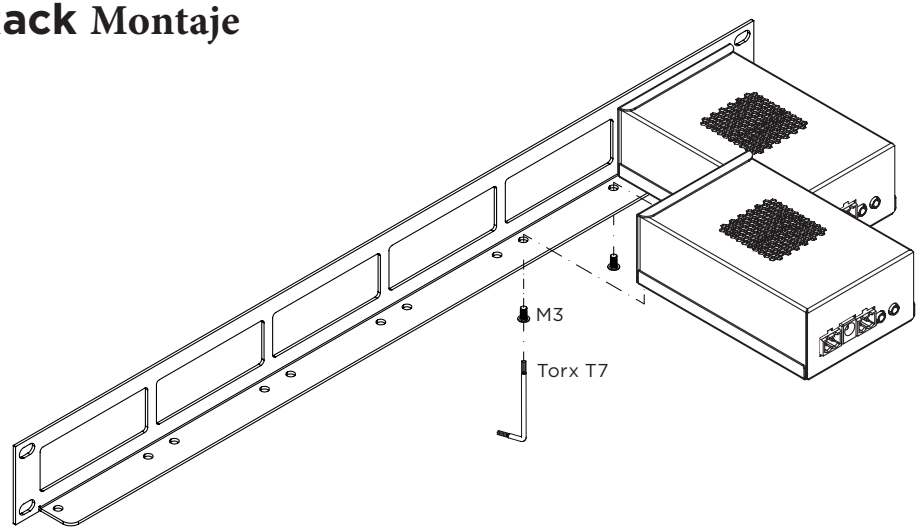


## GA201 Panel frontal

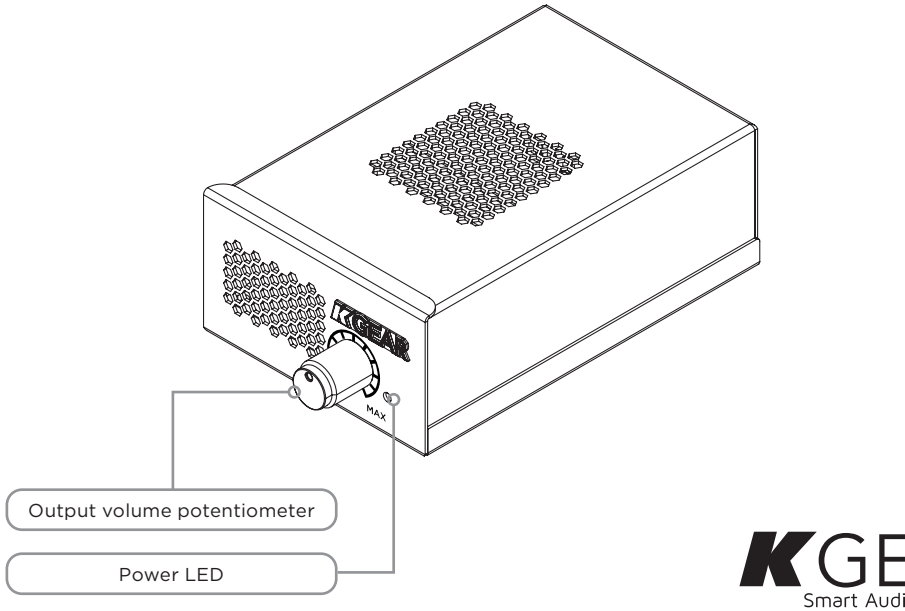


KGEAR
Smart Audio Solutions